LMI Co.

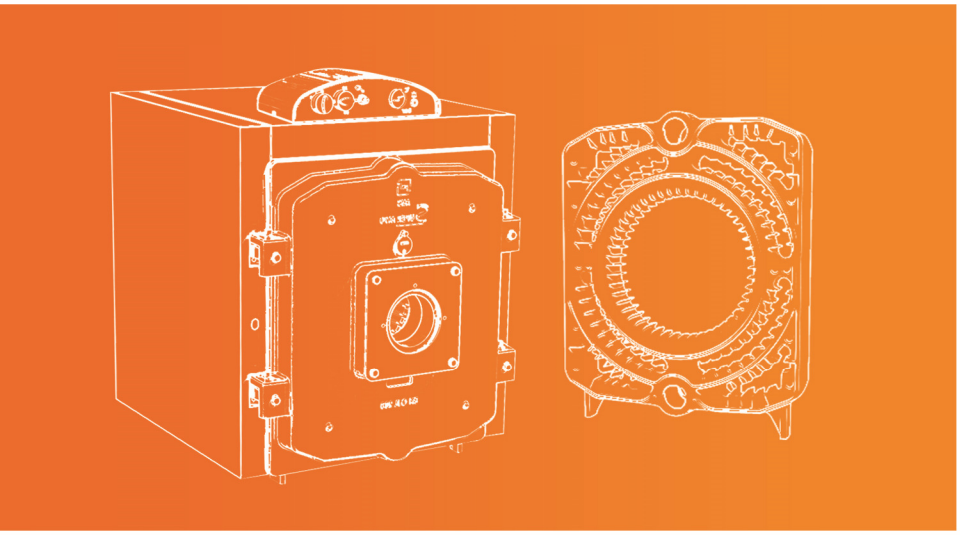

Cast Iron Boilers

- S90
- Super M90
- L90
- Hyper

System Certification LIBERO ASSURANCE ISO 9001:2015
System Certification LIBERO ASSURANCE ISO 14001:2015
System Certification LIBERO ASSURANCE ISO 45001:2018
System Certification LIBERO ASSURANCE ISO 9001:2015 ISO 14001:2015 ISO 45001:2018
IAS ACCREDITED Management Systems Certification Body MSCB-181

LMI Co.

M3 Cast Iron Boiler

S 90 MODEL

Heating Capacity:
30,000 to 80,000 Kcal/h

Type of Boiler	No. of Elements	Input Capacity		Output Capacity		Working Pressure	Volume of Water Inside Boiler	Water Pressure Drop		Capacity of Combustion Chamber	Smoke Pressure Drop	Lenght of Boiler (L)	Chimney Diameter (F)	Weight
								ΔT:10°c	ΔT:20°c					
		Kcal/h	Kw	Kcal/h	Kw	bar	lit	mbar	mbar	lit	mbar	mm	mm	Kg
S90 - 03	3	33,300	38.7	30,000	34.9	4	14	1.8	-	20.15	0.2	428	180	147
S90 - 04	4	44,400	51.6	40,000	46.5	4	17	4.2	1	28.21	0.2	528	180	179
S90 - 05	5	55,500	64.5	50,000	58.1	4	20	7.2	1.6	36.27	0.2	628	180	211
S90 - 06	6	66,600	77.5	60,000	69.8	4	23	11	2.3	52.39	0.2	728	180	243
S90 - 07	7	77,700	90.4	70,000	81.4	4	26	15	3.3	60.45	0.2	828	180	275
S90 - 08	8	88,800	103.3	80,000	93.0	4	29	20	4.5	68.51	0.2	928	180	307

a:	Selection Switch
b:	Setable Thermometer State (0-90°C)
c:	Limit Thermometer (100°C)
d:	Temperature gauge Pressure gauge (120°C - 6bar)
e:	Alarm LED
1:	Output Pipe Flange (1 1/2")
2:	Input Pipe Flange (1 1/2")
3:	Emergency Discharge Vent

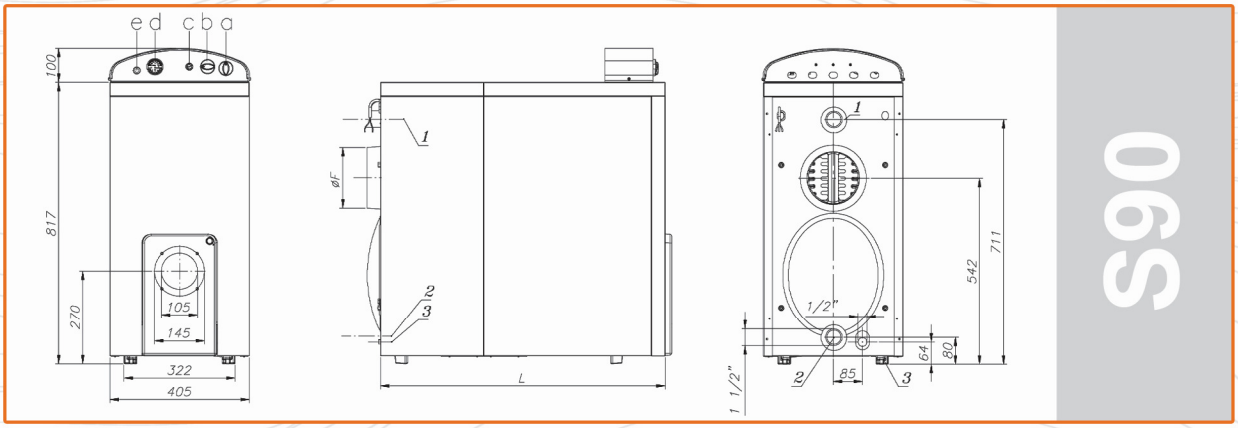

S90

Cast Iron Boiler

SUPER M90

MODEL

Heating Capacity:
90,300 to 326,800 Kcal/h

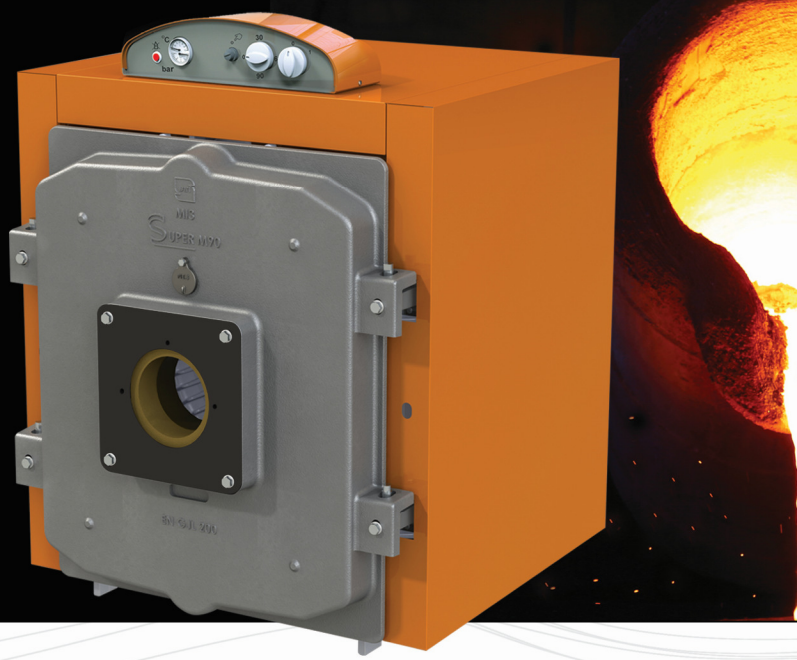

Type of Boiler	No. of Elements	Input Capacity		Output Capacity		Working Pressure	Volume of Water Inside Boiler	Water Pressure Drop		Smoke Pressure Drop	Lenght of Boiler (L)	Chimney Diameter (F)	Weight
								ΔT:10°c	ΔT:20°c				
		Kcal/h	Kw	Kcal/h	Kw	bar	lit	mbar	mbar	mbar	mm	mm	Kg
SuperM90 - 04	4	98,900	115	90,300	105	4	58	370	450	0.4	649	250	398
SuperM90 - 05	5	135,880	158	123,840	144	4	72	370	580	0.9	780	250	480
SuperM90 - 06	6	173,720	202	158,240	184	4	86	370	715	1.6	911	250	562
SuperM90 - 07	7	210,700	245	191,780	223	4	100	370	845	2	1042	250	644
SuperM90 - 08	8	247,680	288	225,320	262	4	114	370	975	2.3	1173	250	726
SuperM90 - 09	9	282,940	329	258,000	300	4	128	370	1105	3.3	1304	250	808
SuperM90 - 10	10	324,220	377	292,400	340	4	142	370	1235	3.8	1435	250	890
SuperM90 - 11	11	362,920	422	326,800	380	4	156	370	1365	4.4	1566	250	972

a:	Selection Switch
b:	Setable Thermometer State (0-90°C)
c:	Limit Thermometer (100°C)
d:	Temperature gauge Pressure gauge (120°C - 6bar)
e:	Alarm LED
1:	Output Pipe Flange (2 1/2")
2:	Input Pipe Flange (2 1/2")

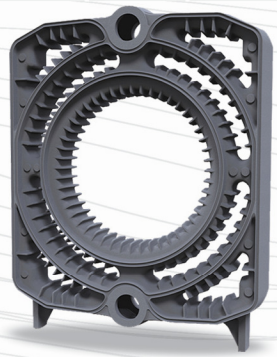

SUPER M90

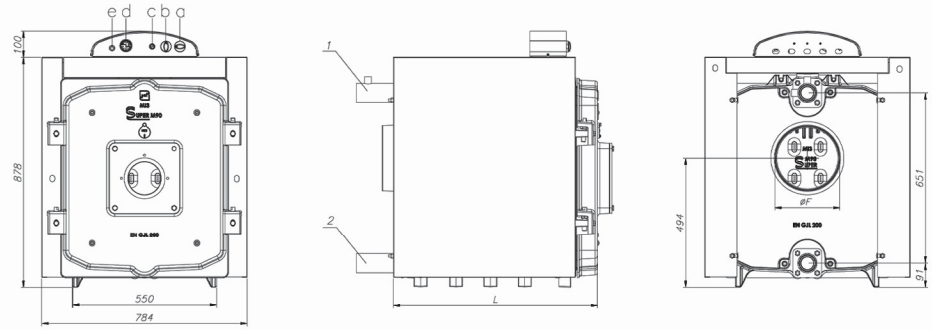

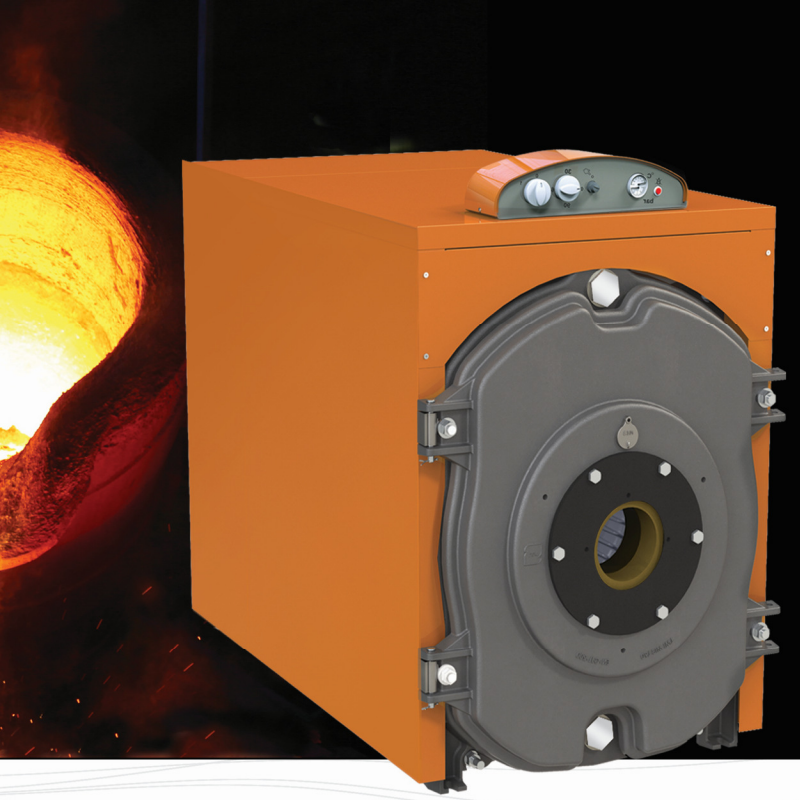

M3 Cast Iron Boiler

L 90 MODEL

Heating Capacity:
560,000 to 172,900 Kcal/h

Type of Boiler	No. of Elements	Input Capacity		Output Capacity		Working Pressure	Volume of Water Inside Boiler	Water Pressure Drop ΔT:20°c	Smoke Pressure Drop	Lenght of Boiler (L)	Chimney Diameter (F)	Weight
		Kcal/h	Kw	Kcal/h	Kw	bar	lit	mbar	mbar	mm	mm	Kg
L90 - 07	7	186,620	217	172,000	200	4	131	20	0.20	1102	250	930
L90 - 08	8	232,200	270	215,000	250	4	150	30	0.22	1232	250	1045
L90 - 09	9	278,640	324	258,000	300	4	169	42	0.24	1362	250	1160
L90 - 10	10	333,680	388	310,000	360	4	188	54	0.26	1492	250	1275
L90 - 11	11	388,720	452	362,000	420	4	207	65	0.28	1622	250	1390
L90 - 12	12	443,760	516	413,000	480	4	226	77	0.30	1752	250	1505
L90 - 13	13	516,000	600	482,000	560	4	245	88	0.32	1882	250	1620
L90 - 14	14	597,700	695	560,000	650	4	264	100	0.34	2012	250	1735

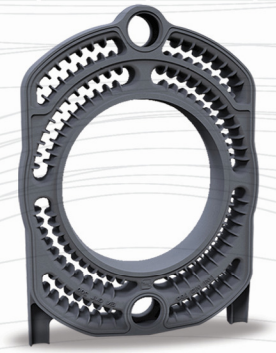

a:	Selection Switch
b:	Setable Thermometer State (0-90°C)
c:	Limit Thermometer (100°C)
d:	Temperature gauge Pressure gauge (120°C - 6bar)
e:	Alarm LED
1:	Output Pipe Flange (3”)
2:	Input Pipe Flange (3”)

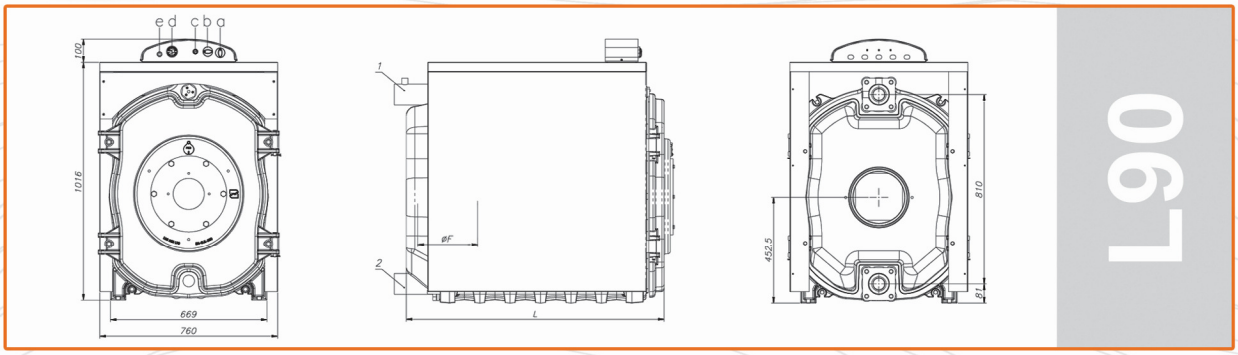

L90

M3 Cast Iron Boiler

HYPER
MODEL

Heating Capacity:
515,900 to 1,203,000 Kcal/h

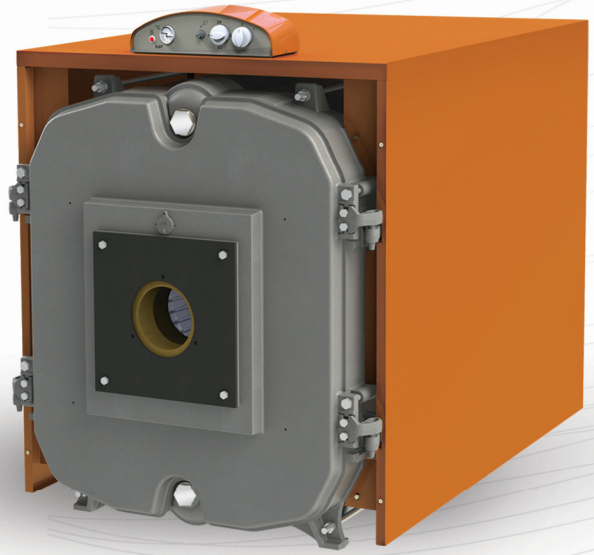

- **Application for skyscrapers till 27 storey (Haight 80 meters)**

Type of Boiler	No. of Elements	Input Capacity		Output Capacity		Working Pressure	Volume of Water Inside Boiler	Capacity of Combustion Chamber	Smoke Pressure Drop	Lenght of Boiler (L)	Chimney Diameter (F)	Weight
		Kcal/h	Kw	Kcal/h	Kw	bar	lit	lit	mbar	mm	mm	Kg
Hyper - 08	8	573,222	666	515,900	600	8	320	370	1.5	1606	400	1970
Hyper - 09	9	657,761	765	593,300	690	8	360	420	2.9	1789	400	2200
Hyper - 10	10	742,746	863	670,700	780	8	400	470	3.2	1972	400	2435
Hyper - 11	11	826,630	961	748,100	870	8	440	520	4.1	2155	400	2665
Hyper - 12	12	911,148	1059	825,500	960	8	480	570	5	2338	400	2895
Hyper - 13	13	1,004,851	1168	911,400	1060	8	520	620	5.9	2521	400	3130
Hyper - 14	14	1,099,669	1278	997,400	1160	8	560	670	6.8	2704	400	3360
Hyper - 15	15	1,213,413	1411	1,100,602	1280	8	600	720	7.8	2887	400	3595
Hyper - 16	16	1,327,170	1543	1,203,783	1400	8	640	770	9.1	3070	400	3825

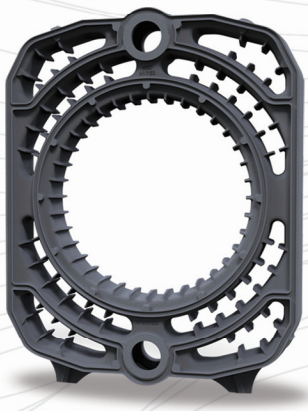

a:	Selection Switch
b:	Setable Thermometer State (0-90°C)
c:	Limit Thermometer (100°C)
d:	Temperature gauge Pressure gauge (120°C - 6bar)
e:	Alarm LED
1:	Output Pipe Flange (3")
2:	Input Pipe Flange (3")

Hyper

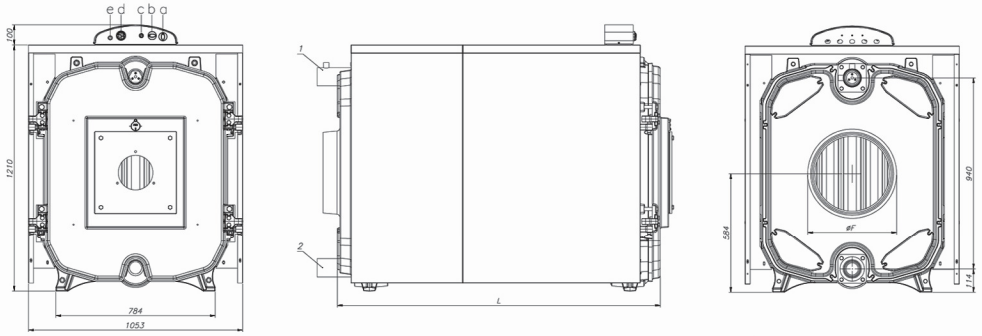

Cast Iron Boilers “MI3”

Heating the water near boiling point

Unconditional gaurantee:

Hyper type 10 years / Other boilers 5 years

Permanent after sales-service

Efficiency more than 90%

National standard of IRAN

Cast iron elements with high energy absorbation

Three pass designe and wetback

Gas and petrol barnes

With capacity 30,000 to 1,203,000 Kcal/h

Panel Control with following capabilities:

1. Thermoset - barometer
2.
3. Safty thermoset (limit)
4. Selection switch (On/Off and control of burner)
5. Alarm LED of limit thermoset

LMI Co.

■ Headquarters and Factory No. 1:
Chahardangeh, Ayatollah Saeedi Highway, Tehran, Iran.
Phone: **+98 21 51093** Fax: **+98 21 55242968**
■ Export Unit:
Phone: **+98 21 51092510** Fax: **+98 21 55246196**
■ Factory No. 2:
End of Negarestan Blvd, Shams Abad Industrial City,
Qom Highway, Tehran, Iran.
Phone: **+98 21 56231666** Fax: **+98 21 56231667**
Website: **www.lmico.net**
Email: **info@lmico.net**
Email of Export Department: **sales@lmico.net**

For the latest edition of the catalouge, please refer to the company's website.
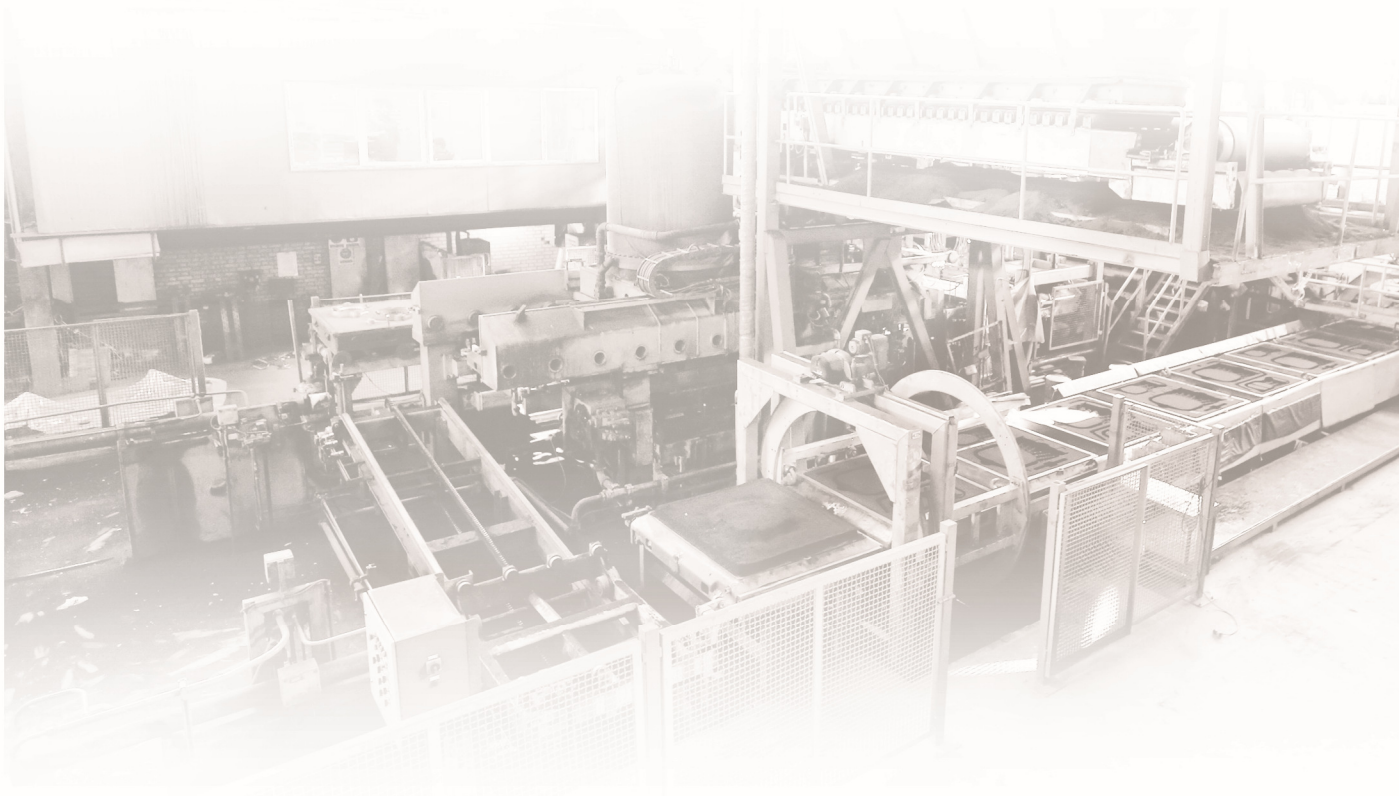
Ca-En-CI Boilers-2021-01-01